# XXVII. *The Deſcription of Two new Micrometers. By Mr.* Ramſden, *Optician; communicated by* Joſeph Banks, *Eſq. P. R. S.*

Read March 25, 1779.

WHEN I offer the deſcription of a new micrometer to the learned members of the Royal Society, I do not flatter myſelf that mere novelty will entitle it to their patronage. Senſible how much the theory of aſtronomy is limited by the imperfection of inſtruments, I always incline to improve rather than invent, except when repeated examinations convince me, that the imperfections ariſe from defect in principle as well as in the conſtruction.

In conſidering micrometers, when an obſerver finds, that with the micrometer, which depends on moveable parallel wires, he cannot meaſure any diameter of a planet, except that which is at right angles to the direction of its apparent motion, he cannot withhold his preference to that conſtruction which meaſures the angle by the ſeparation of the images. It appeared therefore to to me a matter of ſome importance, to inveſtigate the cauſes of the uncertainty which has been found in the obſervations made with the micrometer with a divided object-glaſs. The reſult of my examination convinced me, that were it poſſible to execute the conſtruction of that micrometer, with the degree of accuracy required, it muſt ſtill be ſubject to inaccuracy from its principle.

By the poſition of the micrometer every error of its glaſs is magnified by the teleſcope; and if each ſurface of the micrometer glaſs has not, in every part, preciſely the ſame radius (which opticians muſt allow to be exceedingly difficult) there will be a conſiderable error in the angle to be meaſured, and the eye applied to the different parts of the pencil will, without moving the micrometer, ſee the images of the object in the teleſcope fluctuating, ſometimes appearing to overlap, and ſometimes to ſeparate from each other.

But ſuppoſing the glaſs itſelf to be perfect in its ſubſtance and in its curvature, there will yet remain imperfections which ariſe from its principle. A micrometer glaſs applied to a teleſcope cauſes a very conſiderable abberration. If the focus of the glaſs is poſitive, the extreme aberration will be within the geometrical focus; if negative, it will be beyond it: and the aberration not only affects

affects the diſtinctneſs of the image, but alſo the angle meaſured by the micrometer.

At the time I took up this ſubject, the divided object-glaſs micrometer was the only one which meaſured angles by the ſeparation of two images. Since that time, a very ingenious application of the priſm to this purpoſe has been invented by the rev. Dr. MASKELYNE, Aſtronomer Royal; and although experience has not yet aſcertained the extent of its merit, it will always deſerve great conſideration from its ingenuity; but the more I conſidered the ſubject, I became more fully convinced, that the principle of reflection applied to micrometers would have great advantages over thoſe hitherto conſtructed on the principle of refraction; and the catoptric micrometer I have the honour to deſcribe, beſides the advantage it derives from the principle of reflection, of not being diſturbed by the heterogeniety of light, avoids every defect of other micrometers, and can have no aberration, nor any defect which ariſes from the imperfection of materials, or of execution, as the extreme ſimplicity of its conſtruction requires no additional mirrors or glaſſes to thoſe required for the teleſcope: and the ſeparation of the image being effected by the inclination of the two ſpecula, and not depending on the focus of any lens or mirror, any alteration in the eye of an obſerver cannot affect the angle meaſured.

It has, peculiar to itſelf, the advantages of an adjuſtment to make the images coincide in a direction perpendicular to that of their motion; and alſo of meaſuring the diameter of a planet on both ſides the zero, which will appear no inconſiderable advantage to obſervers who know how much eaſier it is to aſcertain the contact of the external edges of two images than their perfect coincidence. A ſhort explanation of the annexed drawings will make the conſtruction and the properties of this micrometer obvious.

I divided the ſmall ſpeculum of a reflecting teleſcope, of CASSEGRAIN'S conſtruction, into two equal parts, by a plane acroſs its center; and by inclining the halves of the ſpeculum to each other on an axis at right angles to the plane that ſeparated them, I obtained two diſtinct images. The ſatisfaction I received on the firſt trial was checked by the apparent impoſſibility of reducing this principle to practice. The angular ſeparation of the two images in this caſe being half the angular inclination of the two ſpecula, it required an index of an unmanageable length, to allow the quantity of one ſecond of a degree to become viſible. Some time afterwards, on reviſing the principle, I conſidered, that if both the halves of the mirror turned on their center of curvature, there could be no alteration in their relative inclination to each other from their motion on this center; and that any extent of ſcale might be obtained, by fixing the center of motion at a proportional diſtance from the common center of curvature. This will be better underſtood from the annexed drawing.

A (fig. I.) repreſents the ſmall ſpeculum divided into two equal parts; one of which is fixed on the end of the arm B; the other end of the arm is fixed on a ſteel axis X, which croſſes the end of the teleſcope C. The other half of the mirror A is fixed on the arm D, which arm at the other end terminates in a ſocket *y*, that turns on the axis, X; both arms are prevented bending by the braces *a a*. G repreſents a double ſcrew, having one part *e* cut into double the number of threads in an inch to that of the part *g*: the part *e* having 100 threads in one inch, and the part *g* 50 only. The ſcrew *e* works in a nut F in the ſide of the teleſcope, while the part *g* turns in a nut H, which is attached to the arm B; the ends of the arms B and D, to which the mirrors are fixed, are ſeparated from each other by the point of the double ſcrew preſſing againſt the ſtud *b*, fixed to the arm D, and turning in the nut H on the arm B. The two arms B and D are preſſed againſt the direction of the double ſcrew *eg* by a ſpiral ſpring within the part *n*, by which means all ſhake or play in the nut H, on which the meaſure depends, is intirely prevented.

From the difference of the threads on the ſcrew at *e* and *g* it is evident, that the progreſſive motion of the ſcrew through the nut will be half the diſtance of the ſeparation of the two halves of the mirror, and conſequently the half mirrors will be moved equally in contrary directions from the axis of the teleſcope C.

The wheel V fixed on the end of the double ſcrew has its circumference divided into 100 equal parts, and numbered at every fifth diviſion with 5, 10, &c. to 100, and the index I ſhews the motion of the ſcrew with the wheel round its axis, while the number of revolutions of the ſcrew is ſhewn by the diviſions on the ſame index. The ſteel ſcrew R may be turned by the key S, and ſerves to incline the ſmall mirror at right angles to the direction of its motion. By turning the finger head T (fig. 2.) the eye tube P is brought nearer or farther from the ſmall mirror, to adjuſt the teleſcope to diſtinct viſion; and the teleſcope itſelf hath a motion round its axis for the conveniency of meaſuring the diameter of a planet in any direction. The inclination of the diameter meaſured with the horizon is ſhewn in degrees and minutes by a level and vernier on a graduated circle, at the breech of the teleſcope.

The

The method of adjuſting and uſing the catoptric micrometer is too obvious to require any explanation: it is only neceſſary to obſerve that, beſides the table for reducing the revolutions and parts of the ſcrew to minutes, ſeconds, &c. it may require a table for correcting a very ſmall error which ariſes from the excentric motion of the half mirrors. By this motion their centers of curvature will (when the angle to be meaſured is large) approach a little towards the large mirror; the equation for this purpoſe in ſmall angles is inſenſible, but when angles to be meaſured exceed ten minutes, it ſhould not be neglected. Or, the angle meaſured may be corrected by diminiſhing it in the proportion the verſed ſine of the angle meaſured, ſuppoſing the excentricity radius, bears to the focal length of the ſmall mirror.

The teleſcope to which the catoptric micrometer is applied is of the CASSEGRAIN conſtruction. The great ſpeculum is about twenty-two inches focus, and bears an aperture of $5\frac{5}{10}$ inches, which is conderably larger than thoſe of the ſame focal length are generally made: indeed, the apparent utility of this micrometer makes me wiſh to ſee the reflecting teleſcope meet with further improvements. I believe it would more tend to the advancement of the art of working mirrors, if writers on this ſubject, inſtead of giving us their methods of working

ima-

imaginary parabolas, would demonſtrate the properties of curves for mirrors which, placed in a teleſcope, will ſhew images of objects perfectly free from aberration; or, what will yet be more uſeful in practice, of what forms ſpecula might be made, that the aberration cauſed by one mirror may be corrected by that of the other. If mathematicians aſſume *data* which really exiſt, they muſt ſee, that when the two ſpecula of a reflecting teleſcope are parabolas, they cauſe a very conſiderable aberration, which is negative, that is to ſay, the focus of the extreme rays is longer than thoſe of the middle ones. If the large ſpeculum is a parabola, the ſmall one ought to be an ellipſe; but when the ſmall ſpeculum is ſpherical, which is generally the caſe in practice, if concave, the figure of the large ſpeculum ought to be an hyperbola; if convex, the large ſpeculum ought to be an ellipſe, to free the teleſcope from aberration.

This will be eaſier underſtood by attending to the poſitions of the firſt and ſecond images; when a curve is of ſuch form that lines drawn from each image, and meeting in any part of the curve, make equal angles with the tangent to the curve at that point, it is evident, that ſuch curve will be free from aberration.

This is the property of a circle when the radiant and image are in the ſame place; but when they recede from

from each other, of an ellipſe, of ſuch form that the radiant and image are in the two *foci*, till one diſtance becoming infinite the ellipſe changes into a parabola, and to an hyperbola when the focus is negative; that is to ſay, when reflected rays diverge, and the focus is on the oppoſite ſide of the mirror.

Theſe principles made me prefer CASSEGRAIN's conſtruction of the reflecting teleſcope to either the Gregorian or Newtonian. In the former, errors cauſed by one ſpeculum are diminiſhed by thoſe in the other.

From a property of the reflecting teleſcope (which has not been attended to) that the apertures of the two ſpecula are to each other very nearly in the proportion of their focal lengths, it follows, that their aberrations will be to each other in the ſame proportion, and theſe aberrations are in the ſame direction, if the two ſpecula are both concave; or in contrary directions, if one ſpeculum is concave, and the other convex.

In the Gregorian conſtruction, both ſpecula being concave, the aberration at the ſecond image will be the ſum of the aberrations of the two mirrors; but in the CASSEGRAIN conſtruction, one mirror being concave, and the other convex, the aberration at the ſecond image will be the difference between their aberrations. By aſſuming ſuch proportions for the *foci* of the ſpecula as are generally uſed in the reflecting teleſcope, which is about as 1 to 4, the aberration in the CASSEGRAIN conſtruction will be to that in the GREGORIAN as 3 to 5.

I have mentioned theſe circumſtances in hopes of recommending the demonſtration of curves ſuited to the purpoſes of optics to the attention of mathematicians, which would be of great uſe to artiſts.

I ſhall conclude this paper with the deſcription of a new micrometer ſuited to the principle of refraction; being ſenſible that both principles have their peculiar advantages Though the former part of this paper proves my partiality to the principle of reflection applied to micrometers, yet the very favourable opinion I have of the refracting teleſcope made me attentively conſider ſome means of applying a micrometer to it, which might obviate the errors complained of in the former part of this paper.

The application of any lens or medium between the object glaſs and its focus muſt inevitably deſtroy the diſtinctneſs of the image; I therefore have employed for the micrometer glaſs one of the eye glaſſes requiſite in the common conſtruction of the teleſcope; but if it ſhould be found neceſſary to apply an additional eye glaſs for the conveniency of enlarging the ſcale, I am able thereby to correct both the colours and ſpherical aberration of the firſt eye glaſs.

This micrometer is applied to the erect eye tube of a refracting teleſcope, and is placed in the conjugate focus of the firſt eye glaſs: hence ariſes its great ſuperiority to the object glaſs micrometer. It has been before obſerved, that if a micrometer is applied at the object glaſs, the imperfections of its glaſs are magnified by the whole power of the teleſcope; but in *this* poſition, the image being conſiderably magnified before it comes to the micrometer, any imperfection in its glaſs will be magnified only by the remaining eye glaſſes, which in any teleſcope ſeldom exceeds five or ſix times.

By this poſition the ſize of the micrometer glaſs will not be the $\frac{1}{100}$th part of the area which would be required if it was placed at the object glaſs; and, notwithſtanding this great diſproportion of ſize, which is of great moment to the practical optician, the ſame extent of ſcale is preſerved, and the images are uniformly bright in every part of the field of the teleſcope.

Fig. 4th, repreſents the glaſſes of a refracting teleſcope; *xy* the principal pencil of rays from the object glaſs o; *tt* and *uu* the axis of two oblique pencils; *a* the firſt eye glaſs; *m* its conjugate focus, or the place of the micrometer; *b* the ſecond eye glaſs, *c* the third, and *d* the

fourth,

fourth, or that which is neareſt the eye. Let *p* be the diameter of the object glaſs, *e* the diameter of a pencil at *m*, and *f* the diameter of the pencil at the eye; it is evident, that the axis of the pencils from every part of the image will croſs each other at the point *m*, and *e*, the width of the micrometer glaſs, is to *p* the diameter of the object glaſs as *ma* is to *go*, which is the proportion of the magnifying power at the point *m*, and the error cauſed by an imperfection in the micrometer glaſs placed at *m* will be to the error, had the micrometer been at *o*, as *m* is to *p*.

Fig. 3d, repreſents the micrometer; A a convex or concave lens divided into two equal parts by a plane acroſs its center; one of theſe ſemi-lenſes is fixed in a frame B, and the other in the frame E. which two frames ſlide on a plate H, and are preſſed againſt it by thin plates *aa:* the frames B and E are moved in contrary directions by turning the button D; L is a ſcale of equal parts on the frame B; it is numbered from each end towards the middle with 10, 20, &c. There are two verniers on the frame E, one at M, and the other at N, for the conveniency of meaſuring the diameter of a planet, &c. on both ſides the zero. The firſt diviſion on both theſe verniers coincides at the ſame time with the two zero's on the ſcale L,

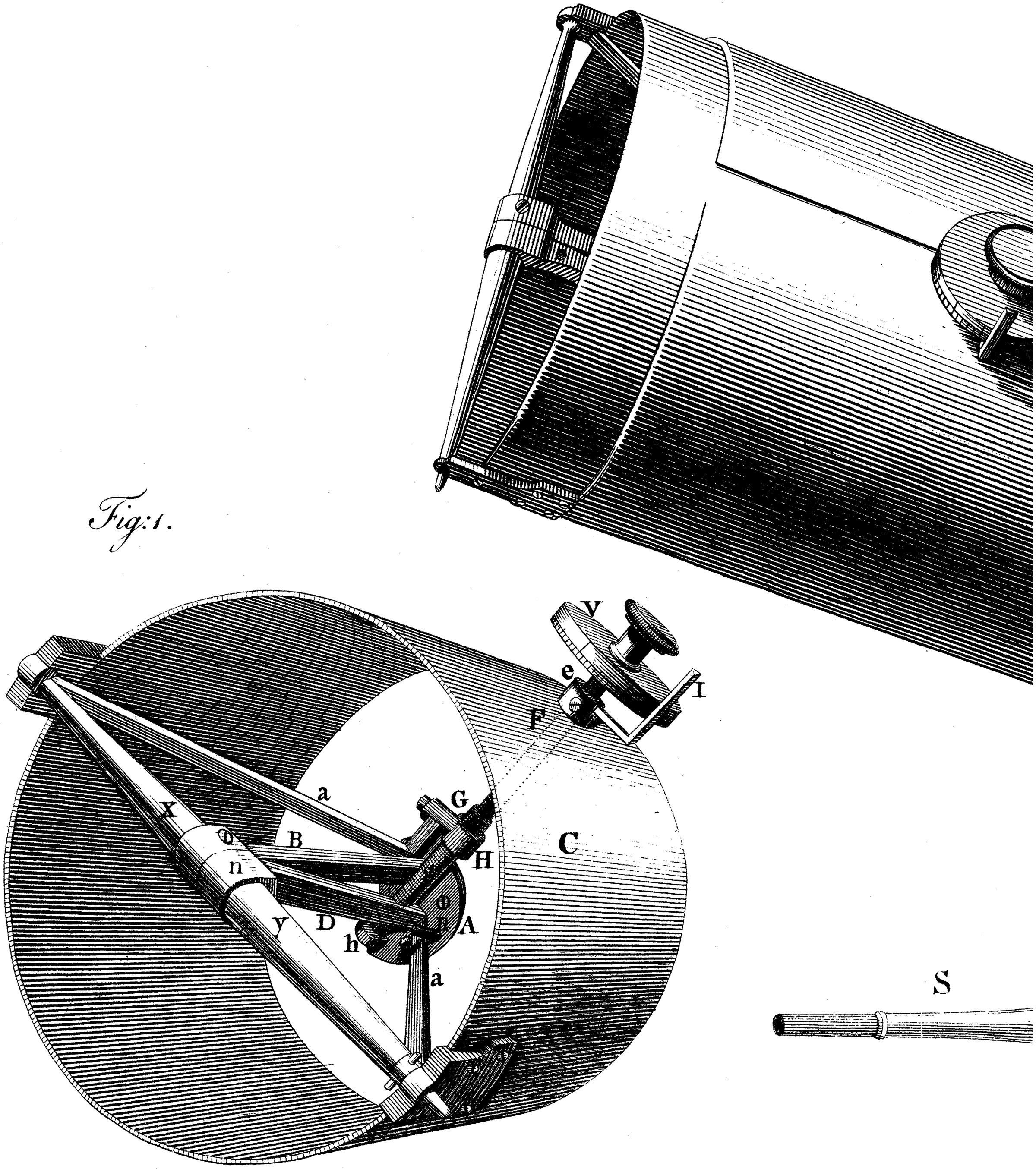

Fig:1.

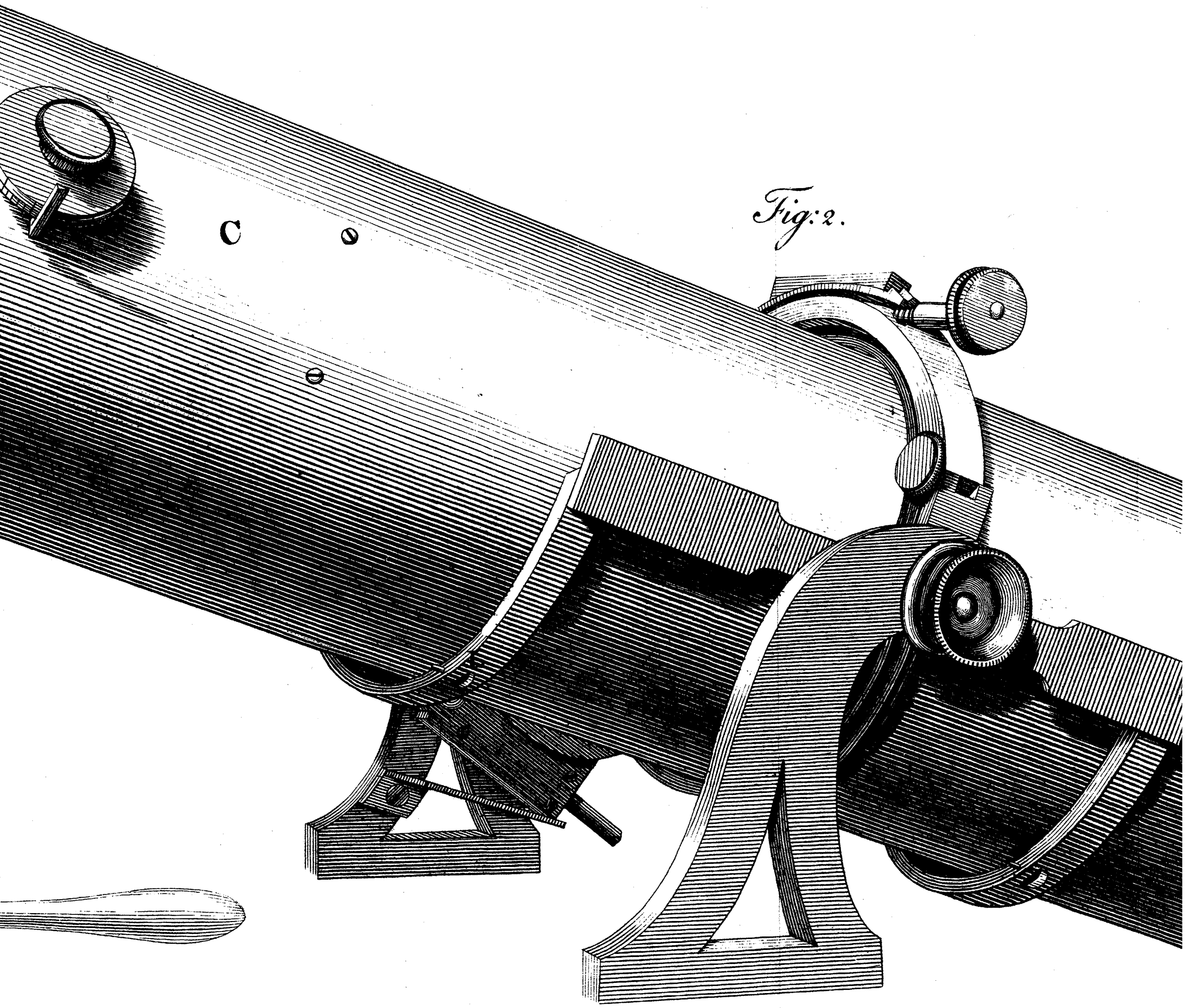
C
Fig: 2.

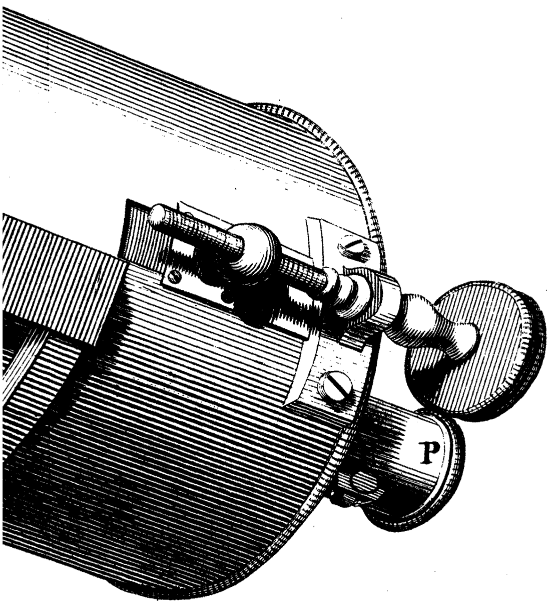
P

Fig: 3.^d

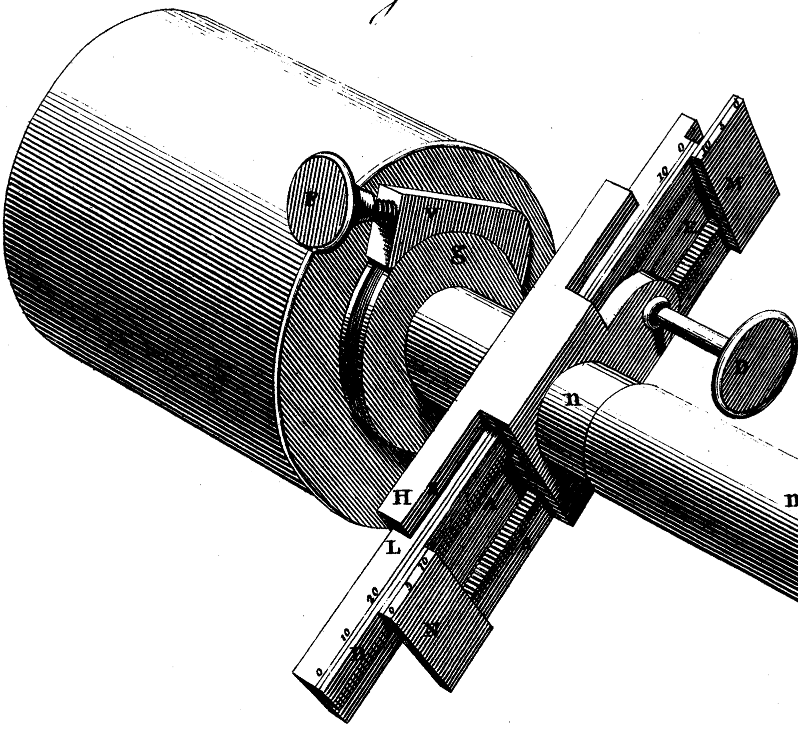

Fig: 4.^th

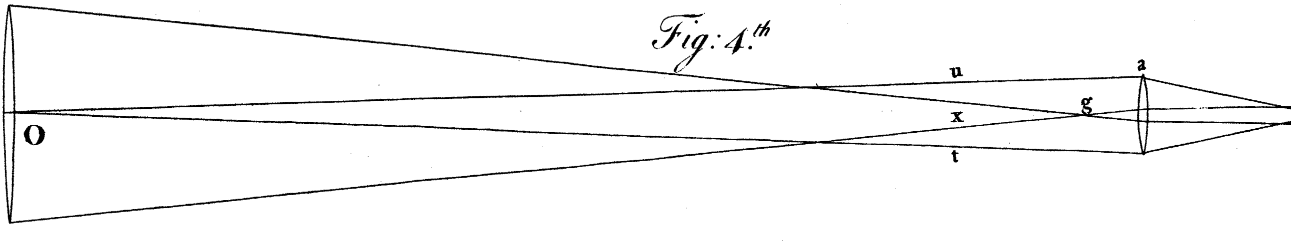

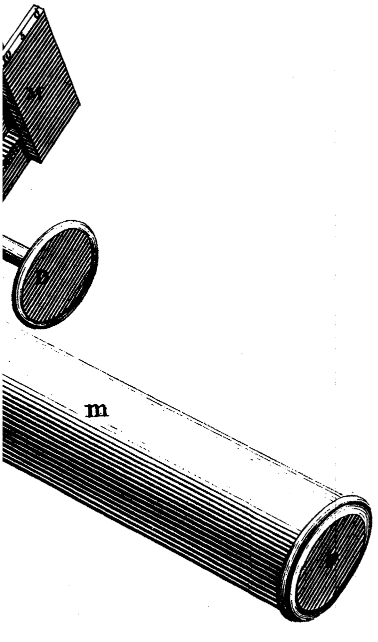
b
m

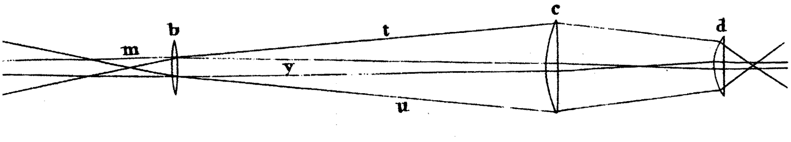
m
b
t
y
u
c
d

and, if the frame is moved towards the right, the relative motion of the two frames is ſhewn on the ſcale L by the vernier M; but if the frame B be moved towards the left, the relative motion is ſhewn by the vernier N.

This micrometer has a motion round the axis of viſion, for the conveniency of meaſuring the diameter of a planet, &c. in any direction, by turning an endleſs ſcrew F, and the inclination of the diameter meaſured with the horizon is ſhewn on the circle *g* by a vernier on the plate V. The teleſcope may be adjuſted to diſtinct viſion by means of an adjuſting ſcrew, which moves the whole eye tube with the micrometer nearer or farther from the object glaſs, as teleſcopes are generally made; or the ſame effect may be produced in a better manner, without moving the micrometer, by ſliding the part of the eye tube *m* on the part *n*, by help of a ſcrew or pinion. The micrometer is made to take off occaſionally from the eye tube, that the teleſcope may be uſed without it.

⁂

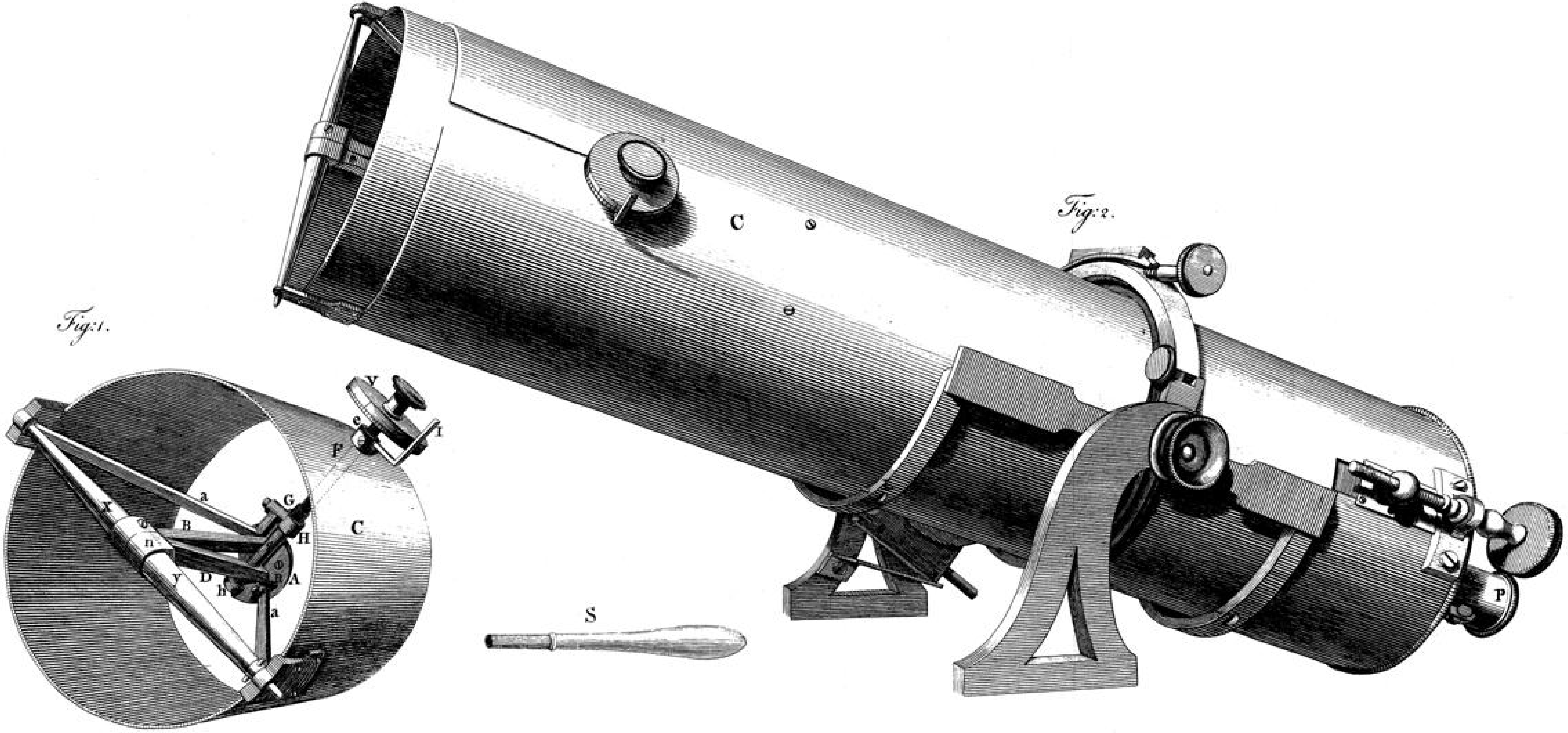

Fig: 1.

Fig: 2.

Fig: 3.^d

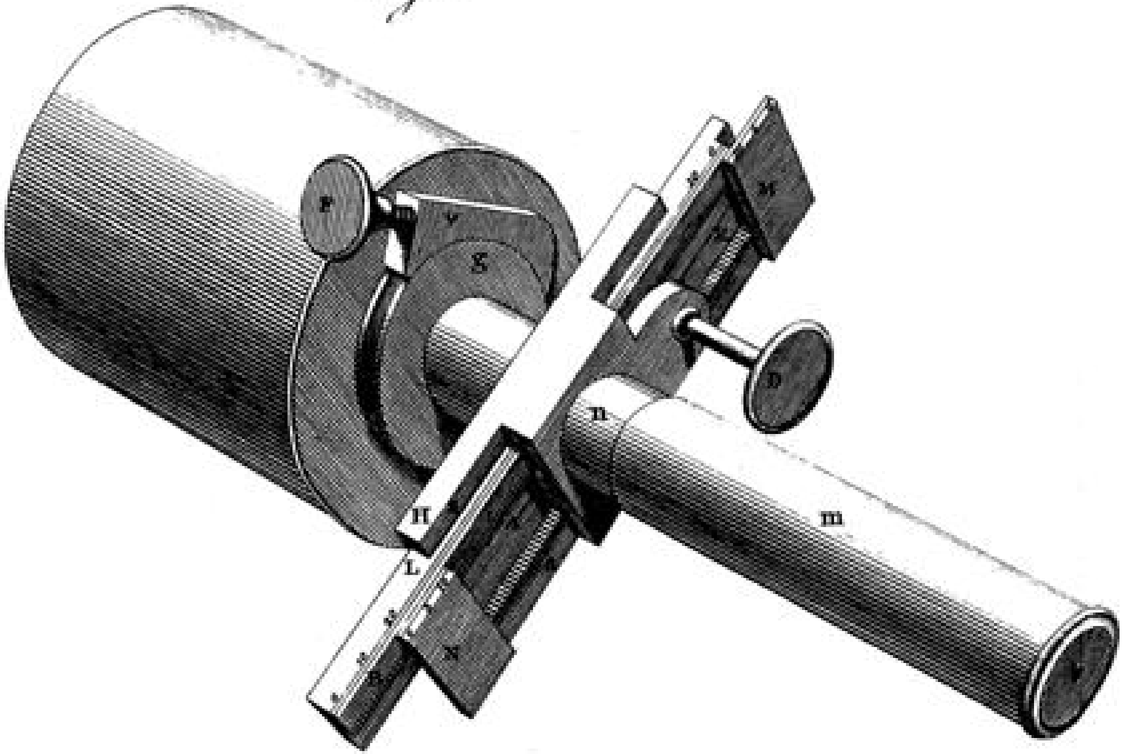

Fig: 4.^th